REF.**8.1**

Waterfall in stainless steel AISI 316L
(Marine quality) and fiberglass. Polished finish.

Support Included

Earth Connection

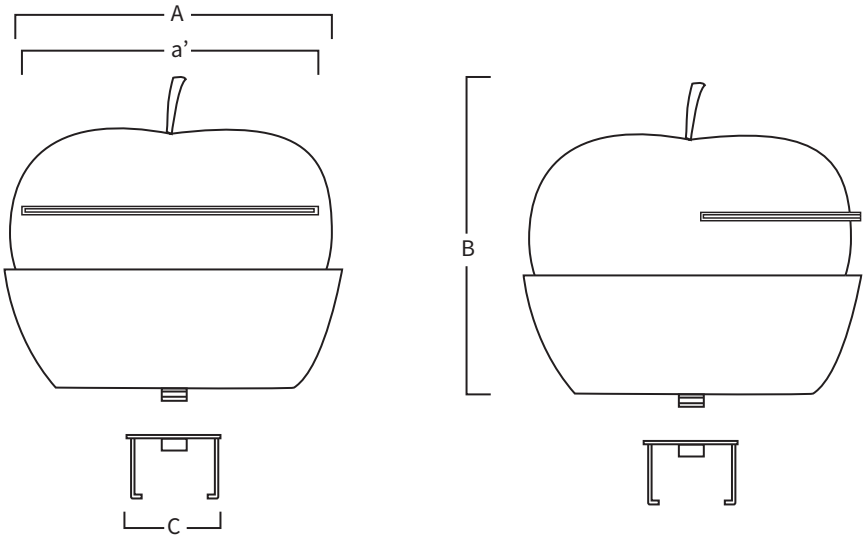

A	a'	B	C
450	460	440	Ø190

Measure in mm

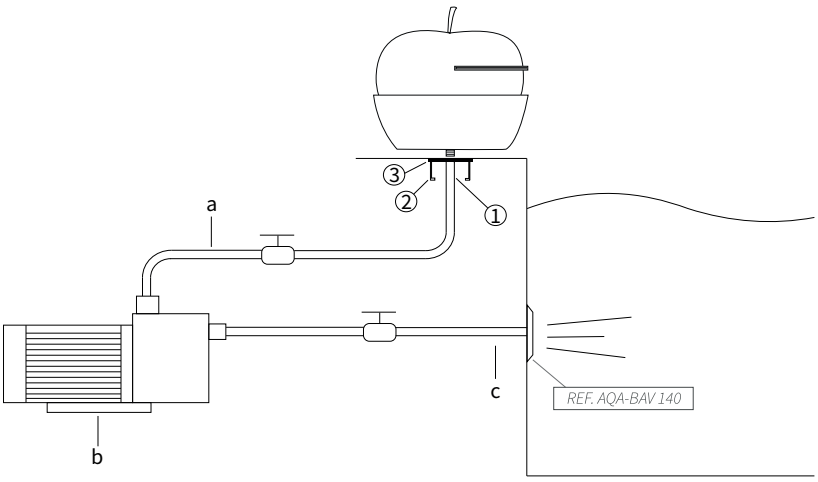

MOUNTING SYSTEM

1) Connect the water intake to the support with 1 1/2" female fitting.
2) Fix the earth connection to the support.
3) Embed the support and screw the waterfall.
   a) Impulsion tube (Ø50mm).
   b) Self-priming pump:
      8.2: 1,5hp - 21,5m³/h (Ref. AQA-B21).
   c) Suction tube 2" (Ø63mm).

**Pneumatic or electric button to be defined in work.*